3.3.4.2 Designs for glass partitions

GRD_ComfortDrive_G1

GRD_ComfortDrive_G2

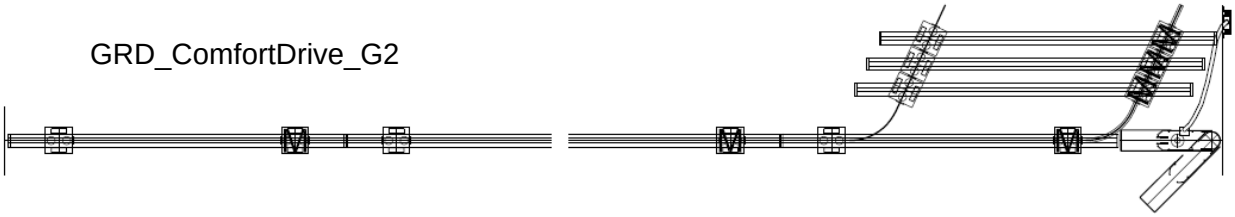

GRD_ComfortDrive_G3

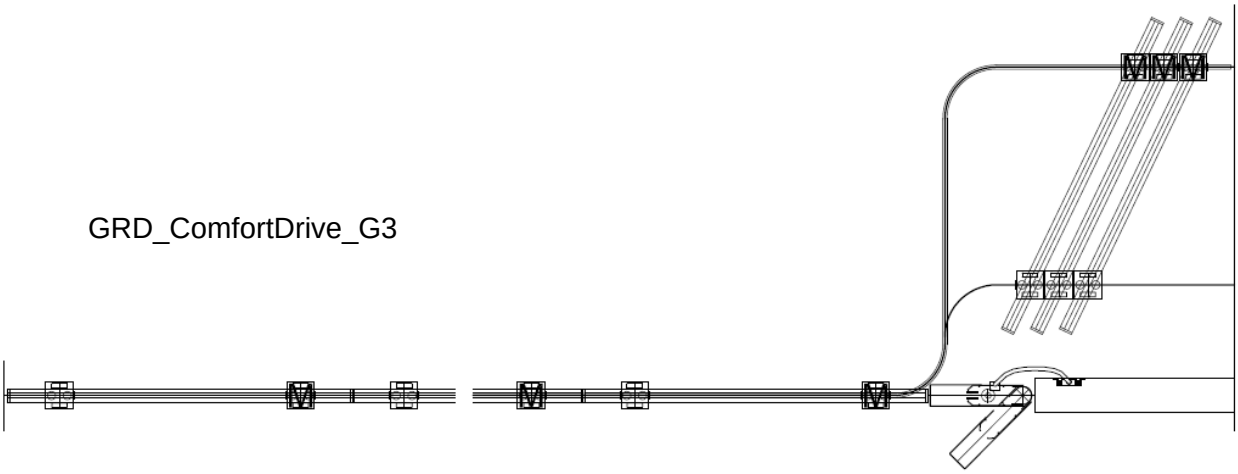

GRD_ComfortDrive_G4

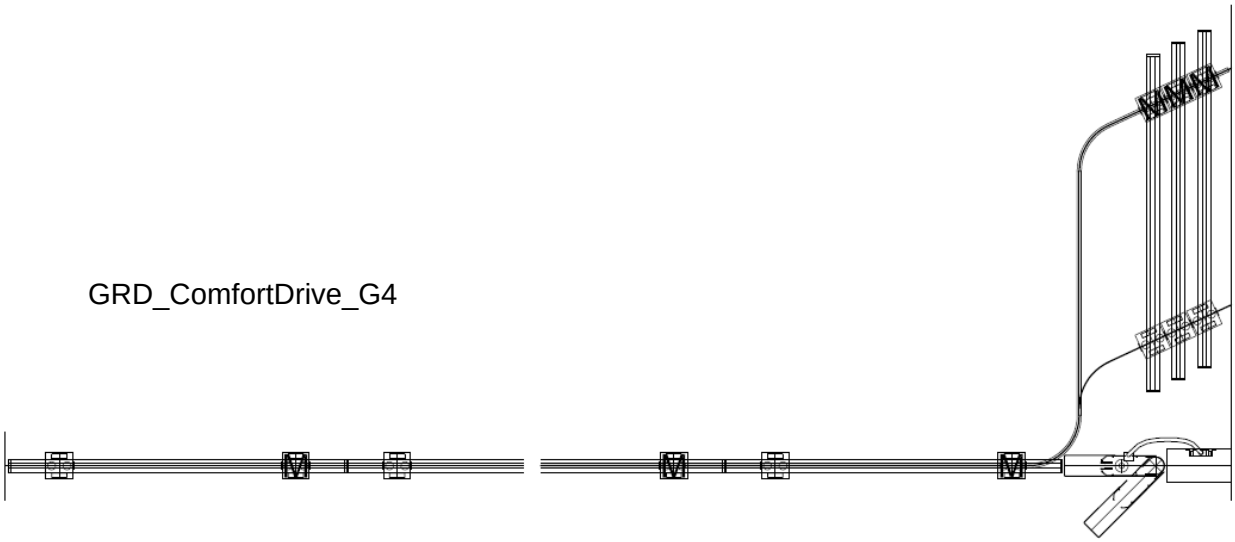

GRD_ComfortDrive_G5

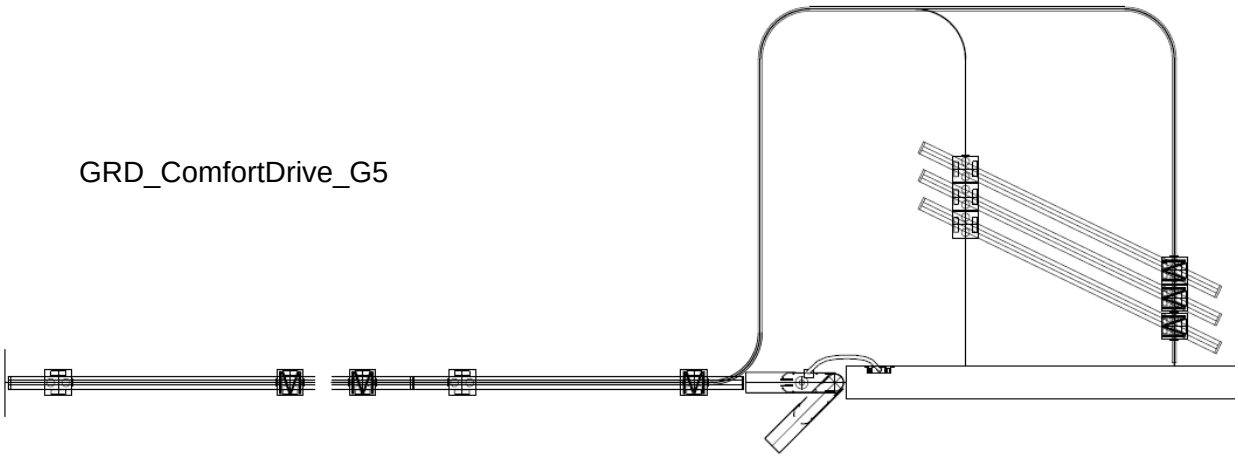

GRD_ComfortDrive_G6

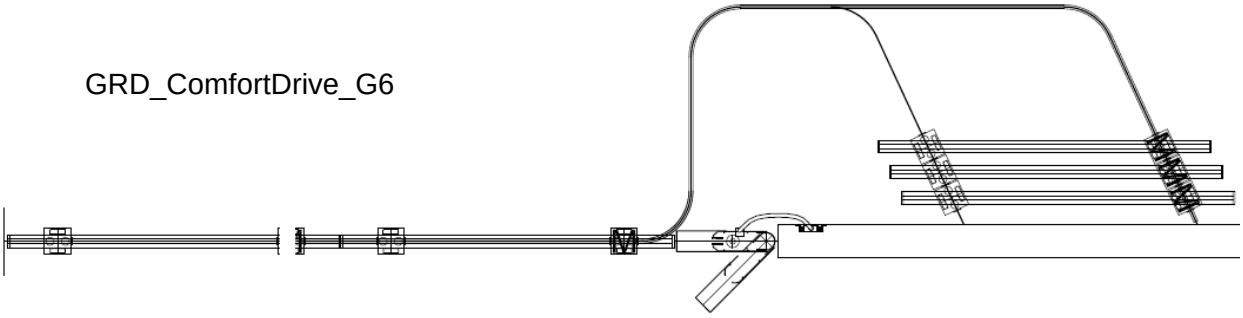

GRD_ComfortDrive_G7

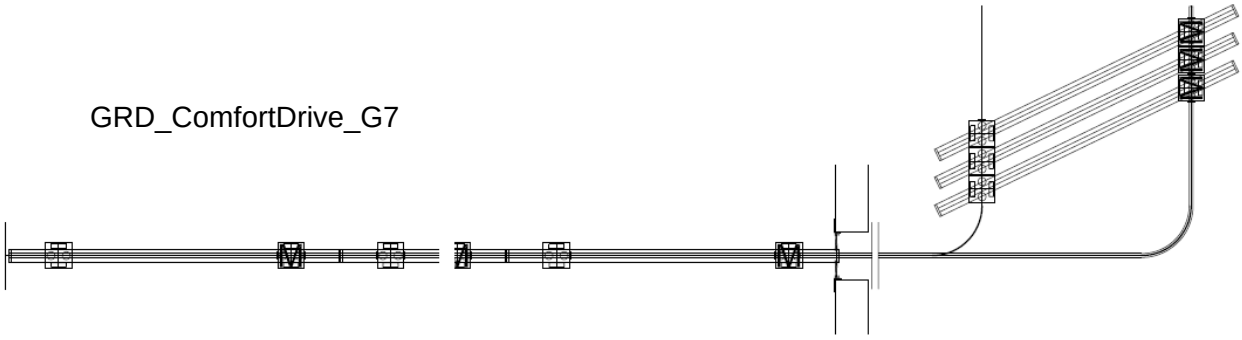

GRD_ComfortDrive_G8

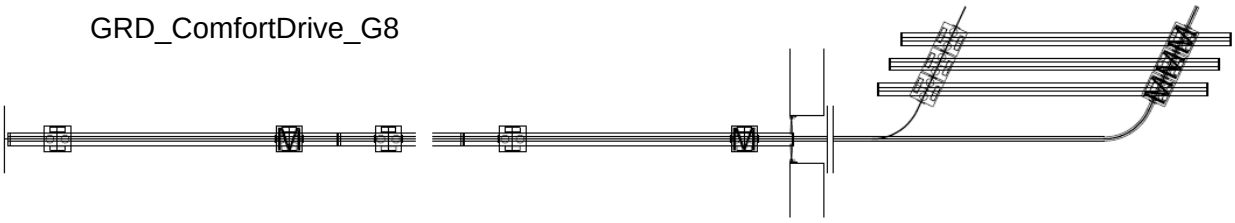

GRD_ComfortDrive_G9

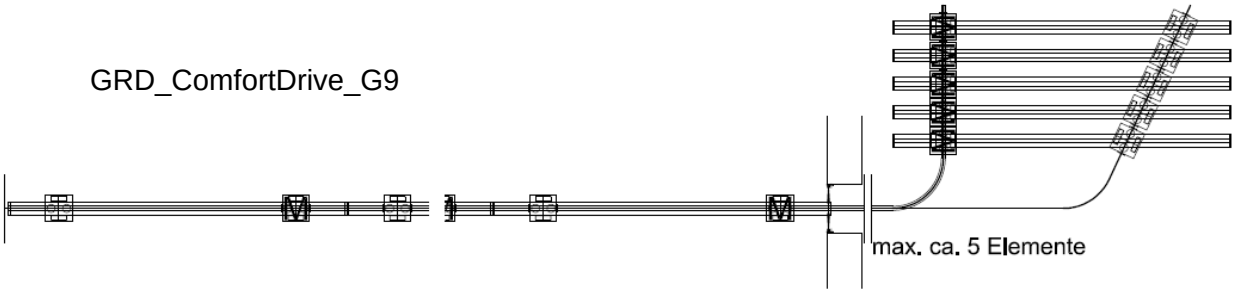

max. approx. 5 elements

GRD_ComfortDrive_G10

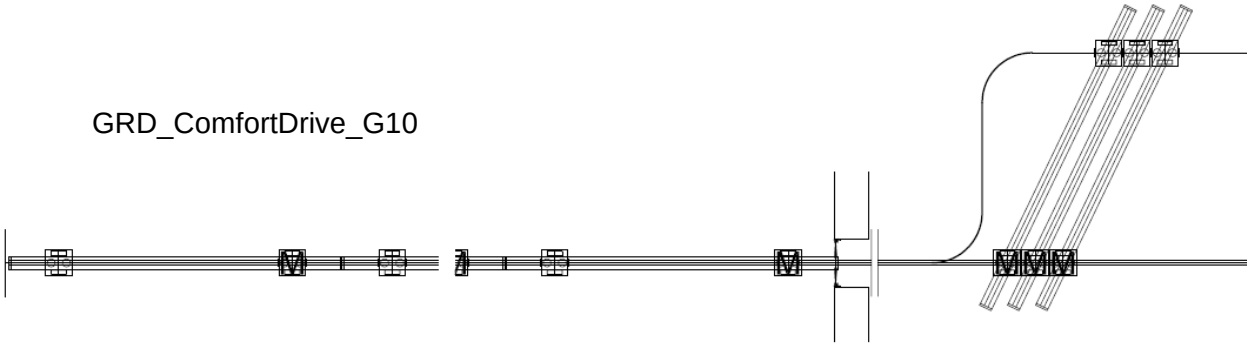

GRD_ComfortDrive_G11

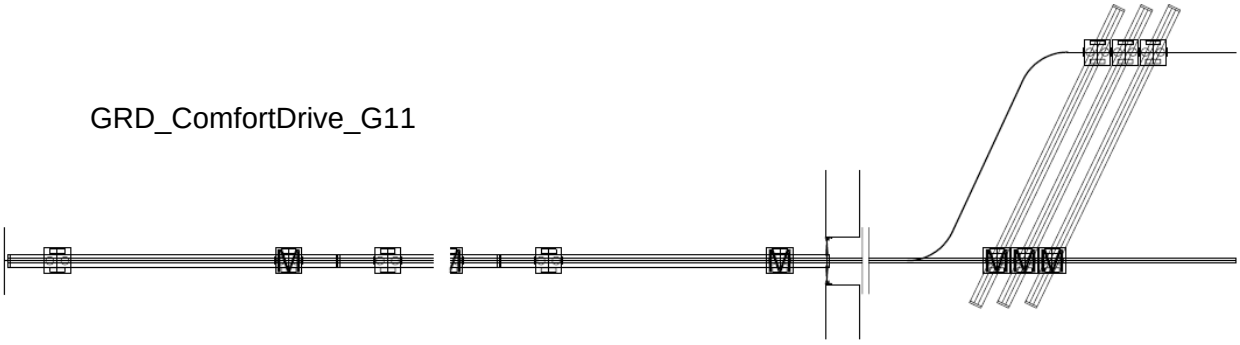

GRD_ComfortDrive_G12

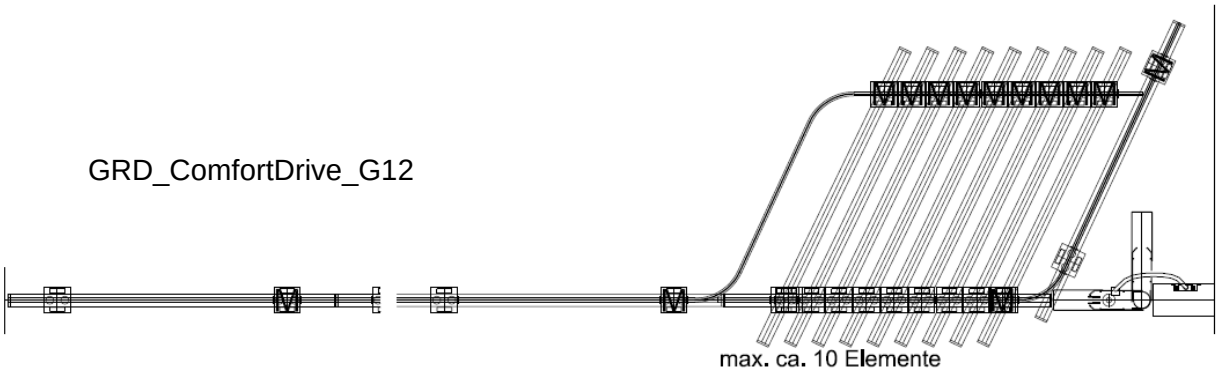

max. approx.10 elements
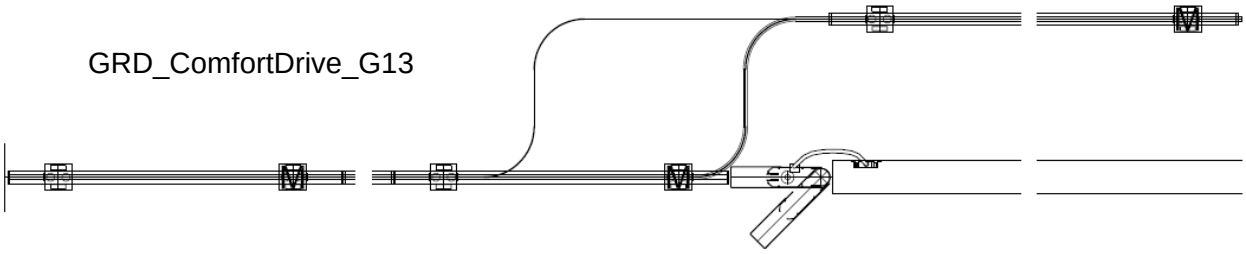
GRD_ComfortDrive_G13