TMP No. 76019038	Page 1 of 1	Rev. 11/08	**Always consult DORMA's web site for latest template at www.dorma-usa.com or call 1-800-523-8483.**

NOTES:
1. DIMENSIONS ARE IN INCHES/ [MM]
2. DO NOT SCALE DRAWING.

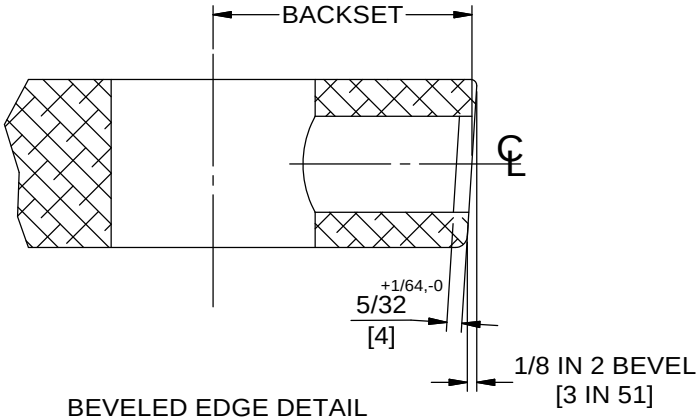

BEVELED EDGE DETAIL

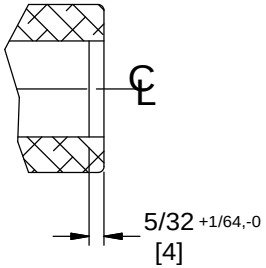

FLAT EDGE DETAIL (OPTIONAL)

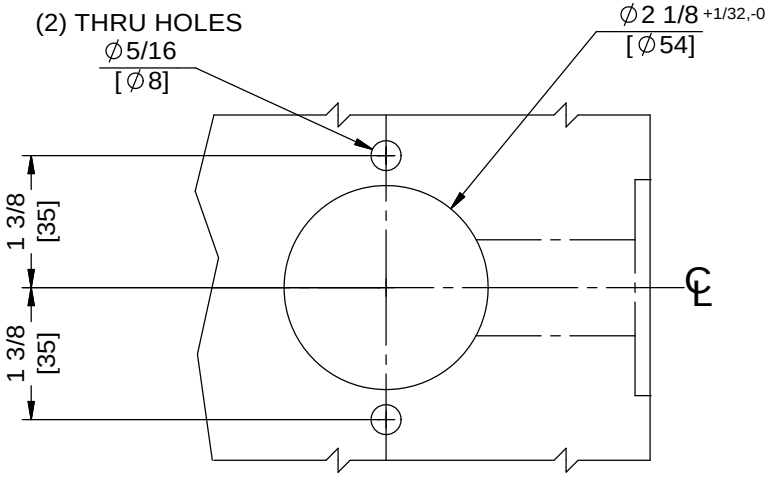

DOOR FACE DETAIL

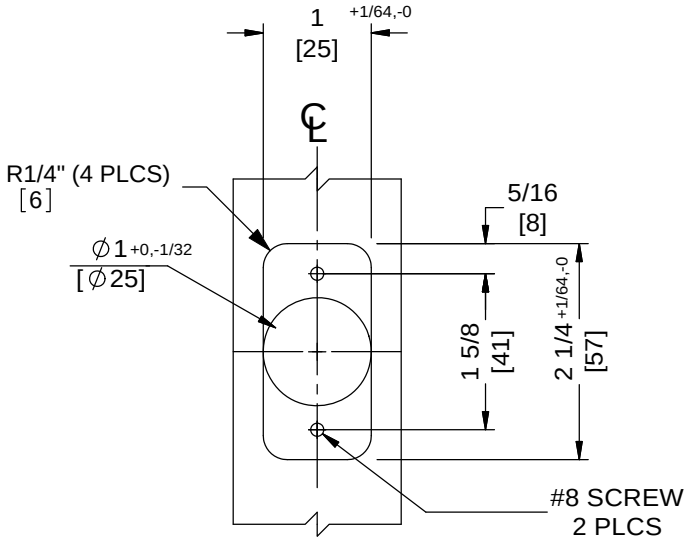

DOOR EDGE DETAIL

Wood Doors For:
CL700 SERIES
Face Plate 1" Flat or Beveled
With 1/4" Radius Corners

DORMA Architectural Hardware
Reamstown, PA 17567