WN 054859 11/98

DORMA BSR

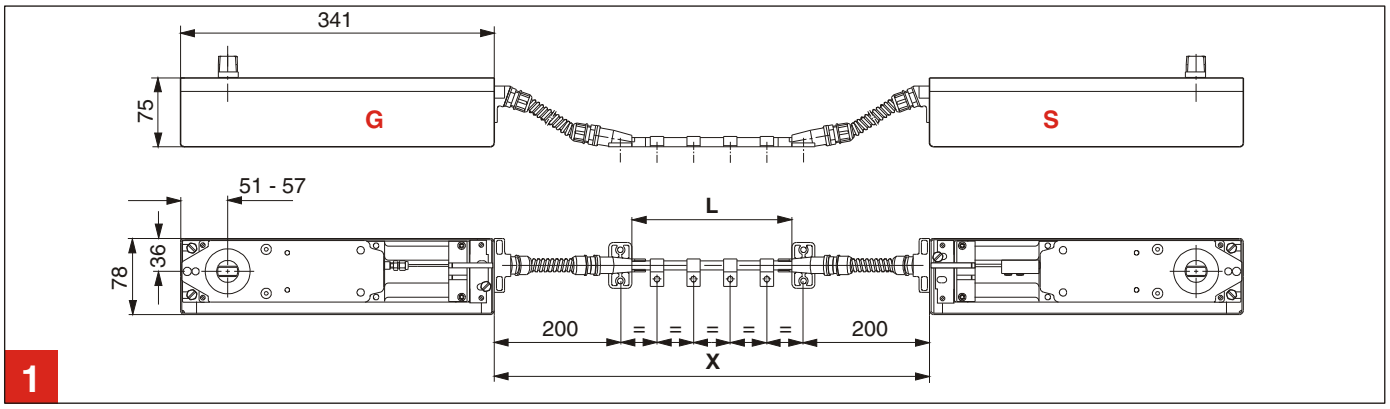

1

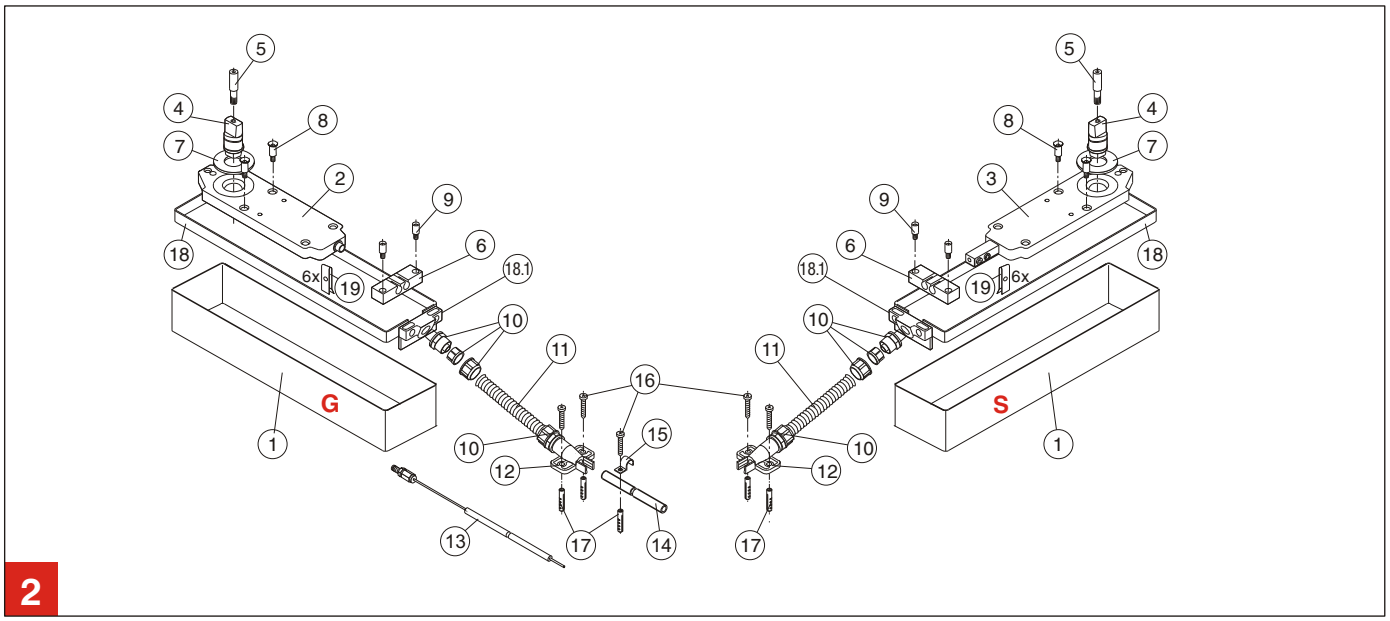

2

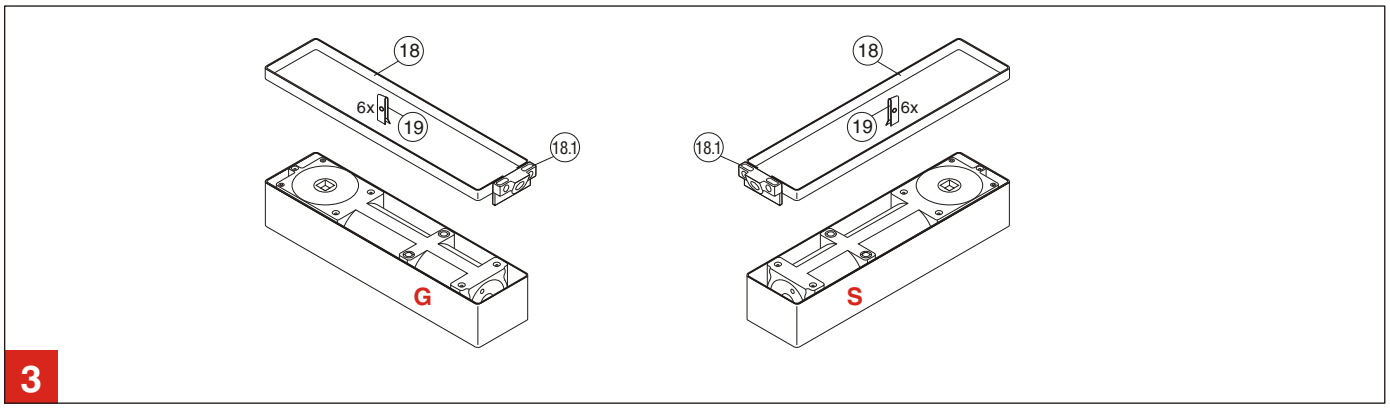

3

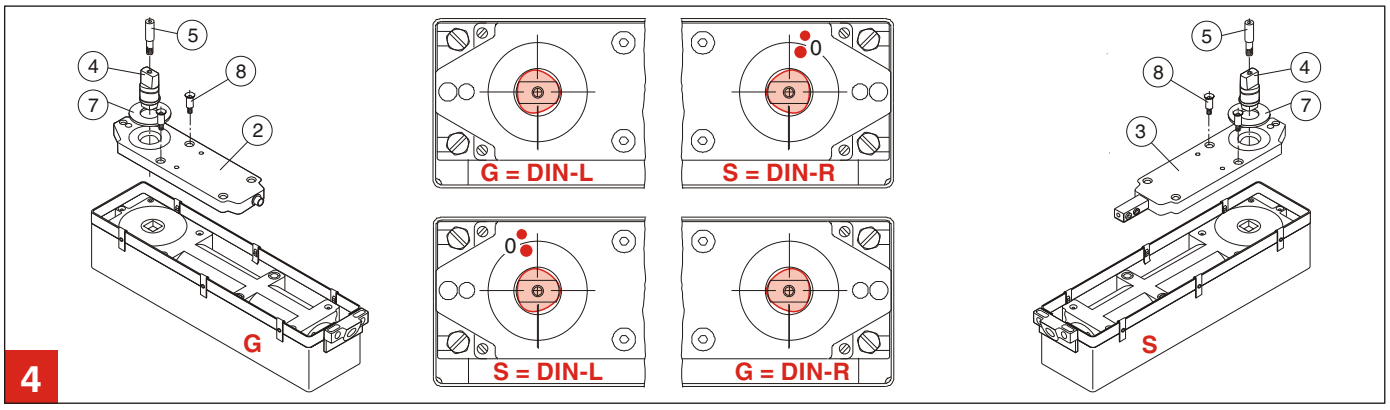

4

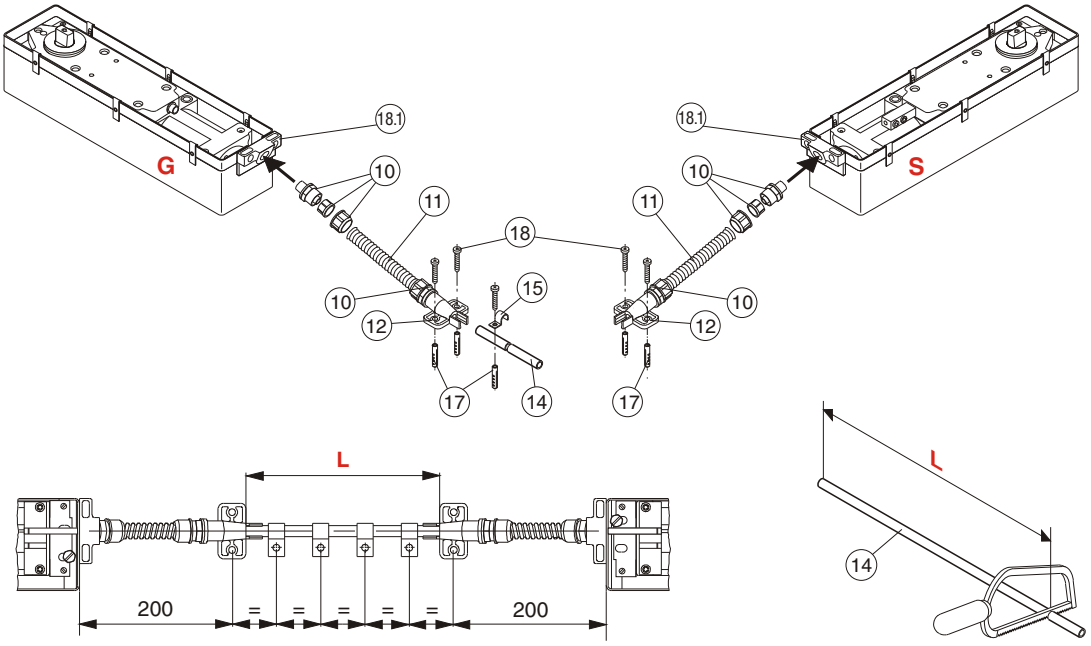
G
S
18.1
10
11
18
15
12
17
14
L
200
=

5

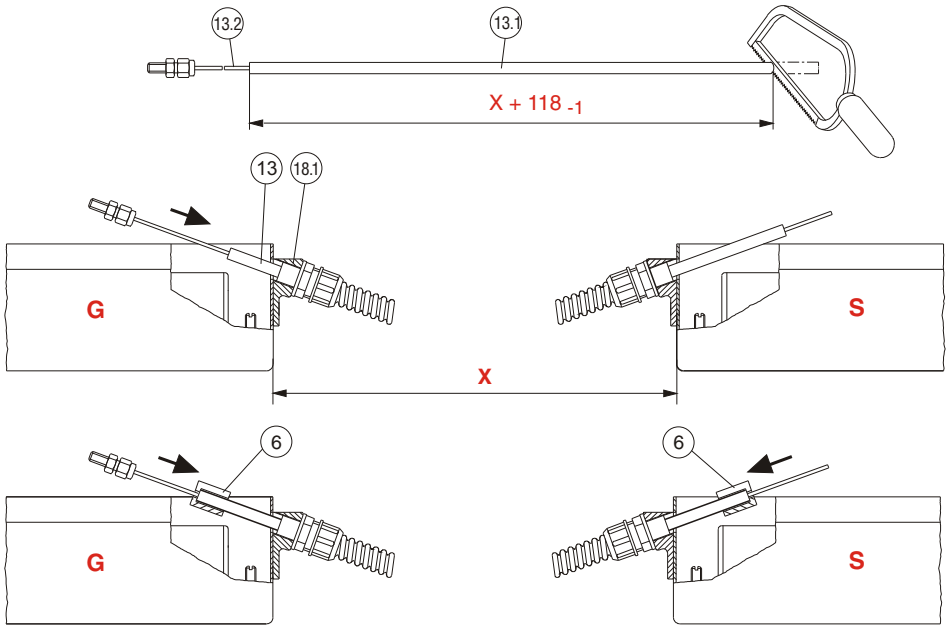
13.2
13.1
X + 118 -1
13
18.1
G
S
X
6

6

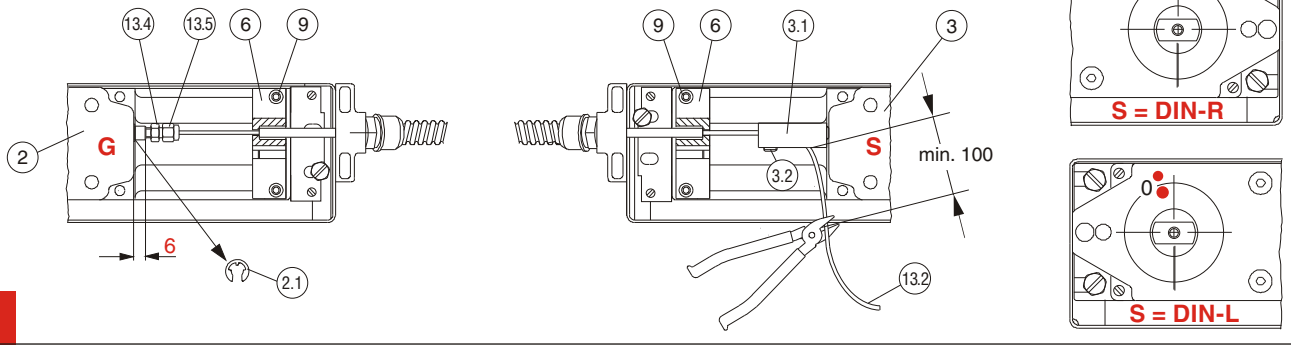
13.4
13.5
6
9
2
G
2.1
3.1
3
S
3.2
min. 100
13.2
0
S = DIN-R
S = DIN-L

7