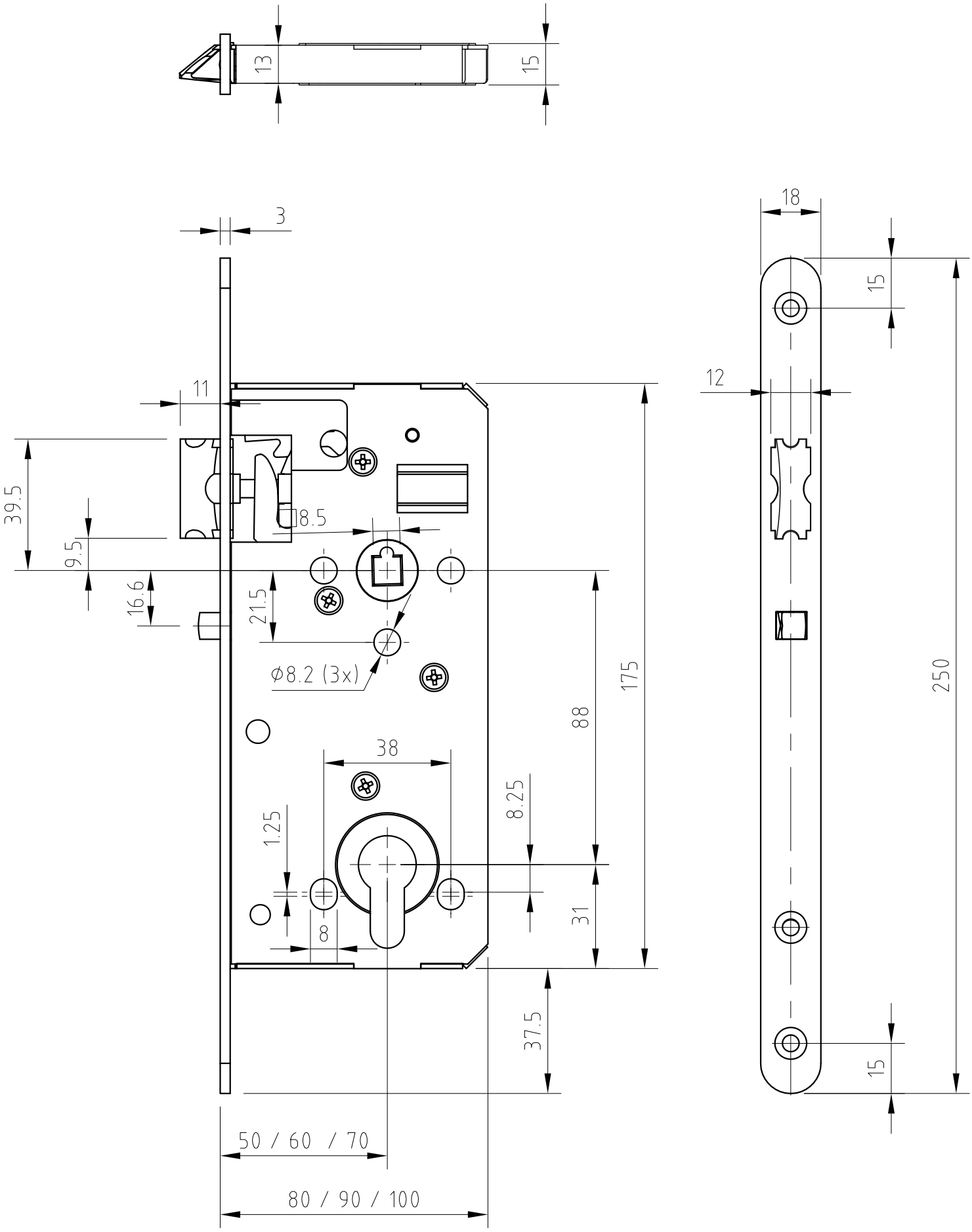
13
15
3
11
39.5
9.5
16.6
21.5
8.5
Ø8.2 (3x)
175
88
38
8.25
1.25
8
31
37.5
50 / 60 / 70
80 / 90 / 100
18
15
12
250
15

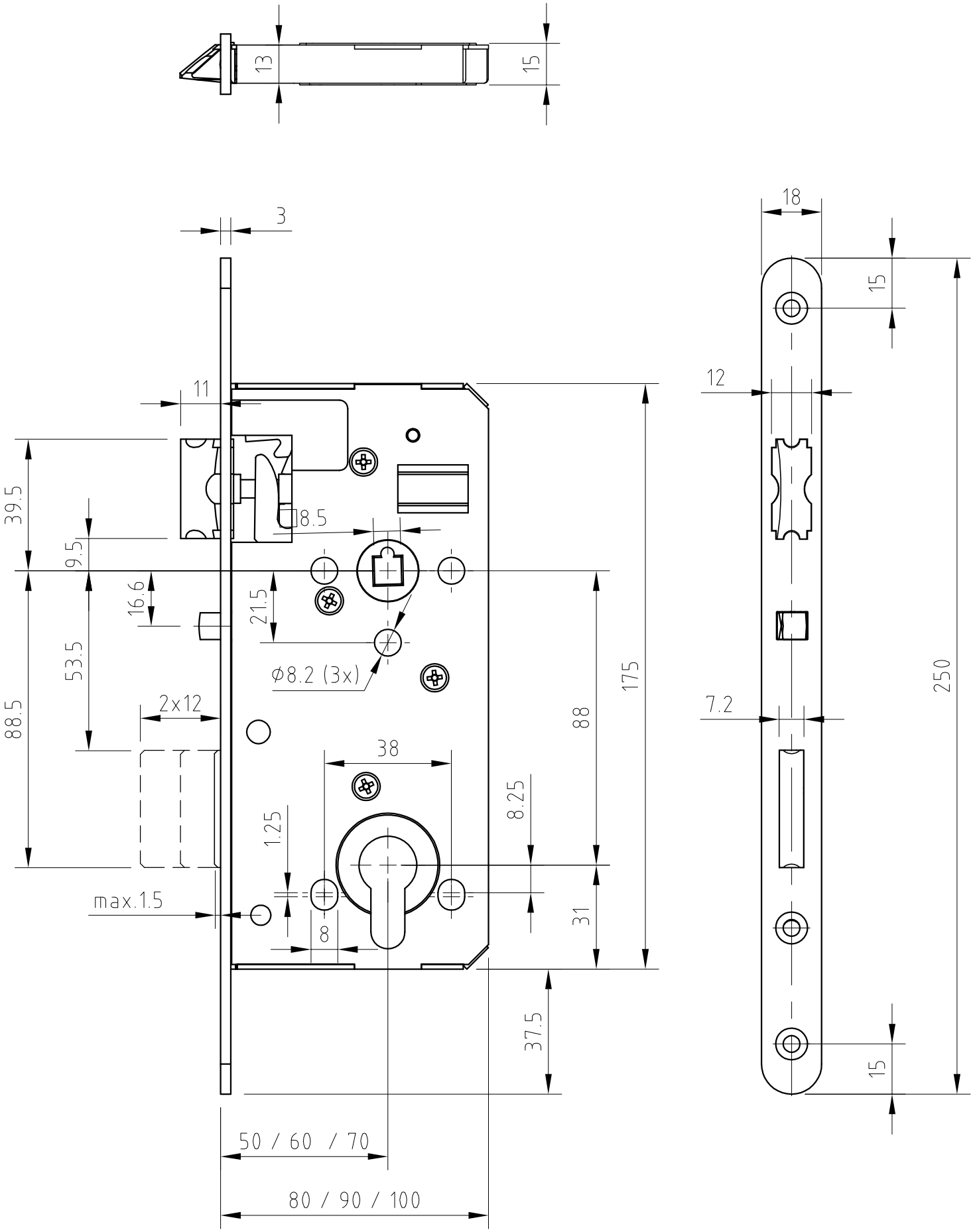
13
15
3
11
39.5
9.5
16.6
53.5
88.5
□8.5
21.5
Φ8.2 (3x)
2x12
38
1.25
8.25
max.1.5
8
88
175
31
37.5
50 / 60 / 70
80 / 90 / 100
18
15
12
7.2
250
15

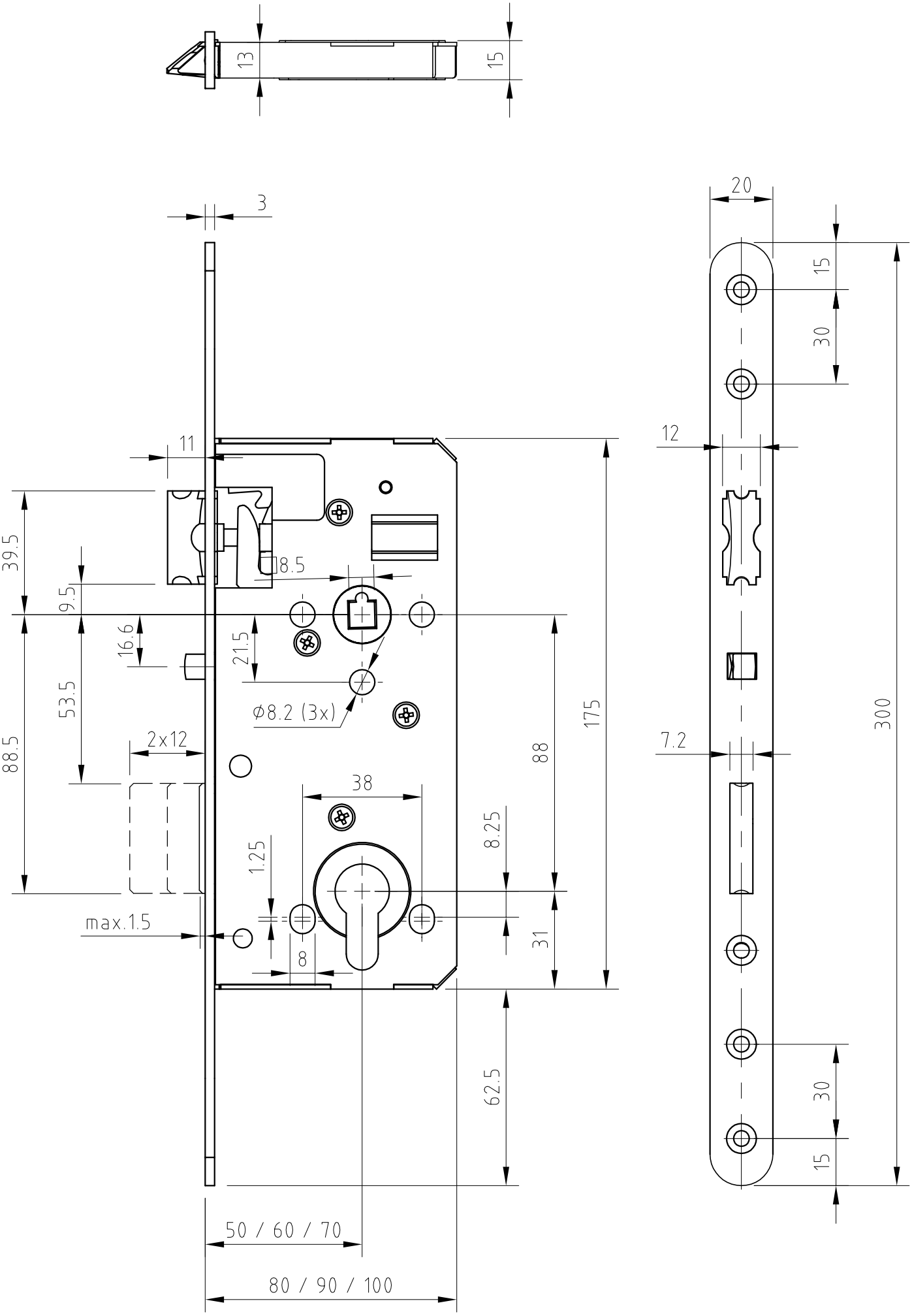
13
15
3
11
39.5
9.5
16.6
53.5
88.5
2x12
max.1.5
8.5
21.5
ϕ8.2 (3x)
38
1.25
8
8.25
31
88
175
62.5
50 / 60 / 70
80 / 90 / 100
20
15
30
12
7.2
30
15
300